Technical Data Sheet

Customer:	Part designation:	Customer part no.:
Kaschke Göttingen	**SP-E 13/6**	**SNK500-15-3**

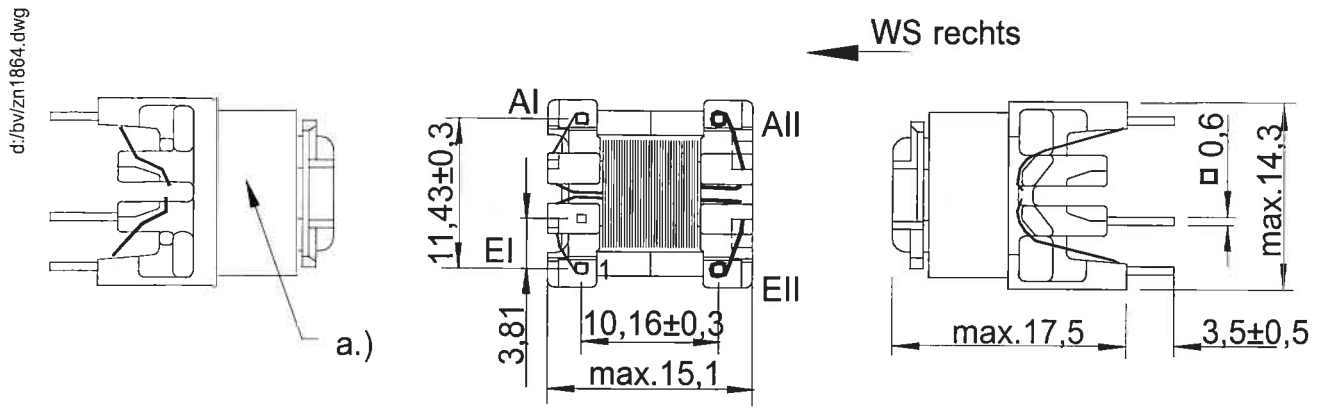

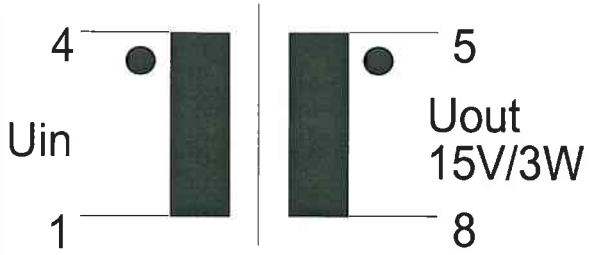

Core / material / air gap / AL	**E13/6 K2006 or equiv.**	
Nominal inductance	**LI= 2,80 mH ±10%**	
maximum transmissible power	**3W**	
Working frequency	**44KHz**	
Transformation ratio	**132:39**	
dielctric strength (50Hz/2s)	**WI-WII: 4 KV**	
Nominal Current		
Design in comp. with standard	**S08**	
Working / storage temperature	**-25°C- 115°C**	**-25°C- 85°C**
Miscellaneous		
switcher	**Link 500/501-uni**	

Remarks : **a.) marking**

Measuring device of L: **W&K 3245** | Measuring conditions of L: **50 mV/10 KHz**

Measured quantity	Unit	No. 1	No. 2	No. 3	No. 4	No. 5

Responsible person:	Date:	Design regulation no:	Index:
Uwe Dickhut	**21.12.2006**	**096.904**	**01**

PLEASE GIVE US YOUR WRITTEN RELEASE Date: _____ Signature: _____